NASA's 2009
Mars Science Laboratory

MSL Project
Jet Propulsion Laboratory
California Institute of Technology

The data/information contained herein has been reviewed and approved for release by JPL Export Administration on the basis that this document contains no export-controlled information.

MSL Overview

- Scheduled to launch in the fall of 2009, the Mars Science Laboratory is part of NASA's Mars Exploration Program, a long-term effort of robotic exploration of the Red Planet.
- Mars Science Laboratory is a highly capable surface rover that is being designed to assess whether Mars ever was, or is still today, an environment able to support microbial life.

Scientific Objectives for MSL

The Mars Science Laboratory will explore and quantitatively assess a local region on Mars' surface as a potential habitat for life, past or present.

A. Assess the biological potential of at least one target environment.
   i. Determine the nature and inventory of organic carbon compounds.
   ii. Inventory the chemical building blocks of life (C, H, N, O, P, S).
   iii. Identify features that may represent the effects of biological processes.

B. Characterize the geology and geochemistry of the landing region at all appropriate spatial scales.
   i. Investigate the chemical, isotopic, and mineralogical composition of martian surface and near-surface geological materials.
   ii. Interpret the processes that have formed and modified rocks and regolith.

C. Investigate planetary processes of relevance to past habitability, including the role of water.
   i. Assess long-timescale (i.e., 4-billion-year) atmospheric evolution processes.
   ii. Determine present state, distribution, and cycling of water and CO_2.

D. Characterize the broad spectrum of surface radiation, including galactic cosmic radiation, solar proton events, and secondary neutrons.

MSL Mission Overview

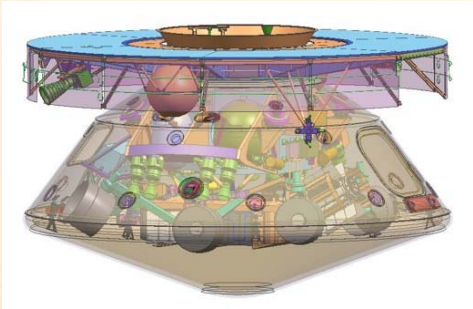

CRUISE/APPROACH

- 10-12 month cruise
- Spinning cruise stage
- Arrive N. hemisphere summer (L_s=120-150)

ENTRY, DESCENT, LANDING

- Guided entry and controlled, powered “sky crane” descent
- 20-km diameter landing ellipse
- Discovery responsive for landing sites ±60º latitude, <+2 km elevation
- 775-kg landed mass

LAUNCH

- Sept. 15 to Oct. 4, 2009
- Atlas V or Delta IV

SURFACE MISSION

- Prime mission is one Mars year
- Latitude-independent and long-lived power source, pending approval
- 20-km range
- 75 kg of science payload
- Acquire ~70 samples of rock/regolith
- Large rover, high clearance; greater mobility than MPF, MER

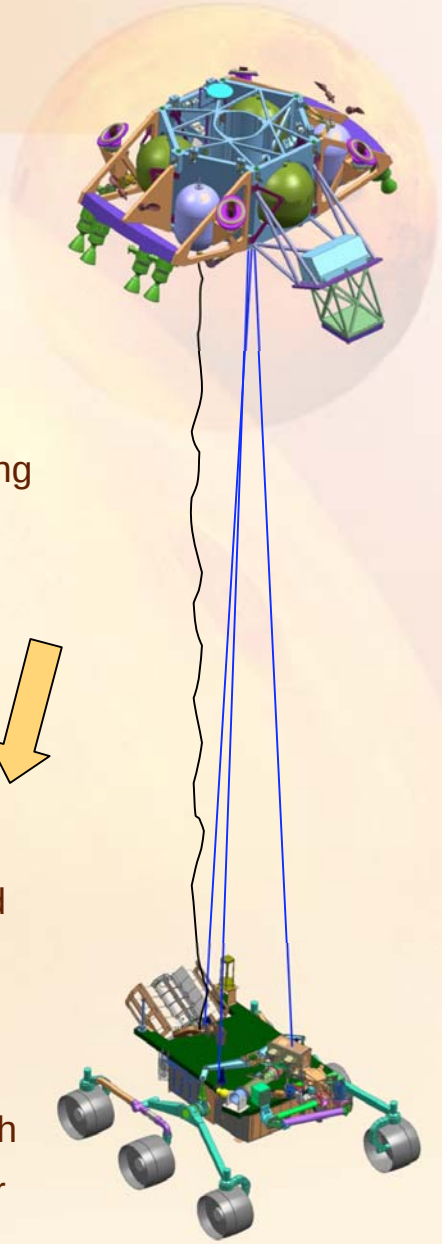

Conceptual Design

MSL Mobility

- The rover should be able to roll over obstacles ~60-75 cm high
- Although the maximum traverse rates can be higher, the expected average is ~100-300 m/sol based on power levels, slippage, steepness of the terrain, visibility, and other variables
- Total traverse capability is in the range of ~20 km
- More information is contained in the “User Guide” available at the MSL Landing Site Selection web sites

MSL EDL

- MSL provides significantly improved access to Mars:
  - 60ºS to 60ºN latitude
  - 20 km diameter landing ellipse
  - Altitudes up to +2.0 km relative to MOLA areoid
- Refer to the “User Guide” for slope, rock distribution, wind, etc. restrictions

EDL Timeline (1 of 2)

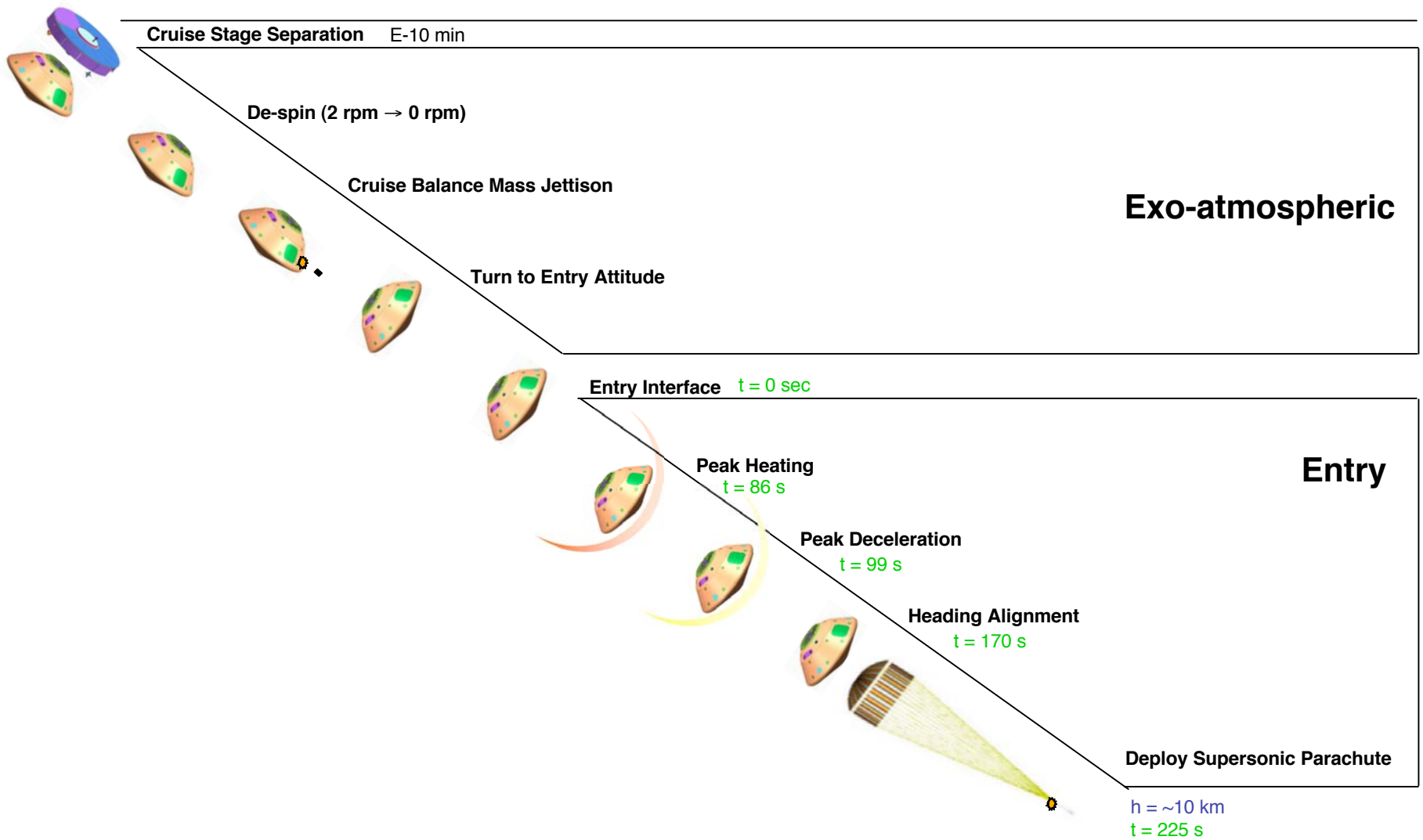

EDL Timeline (2 of 2)

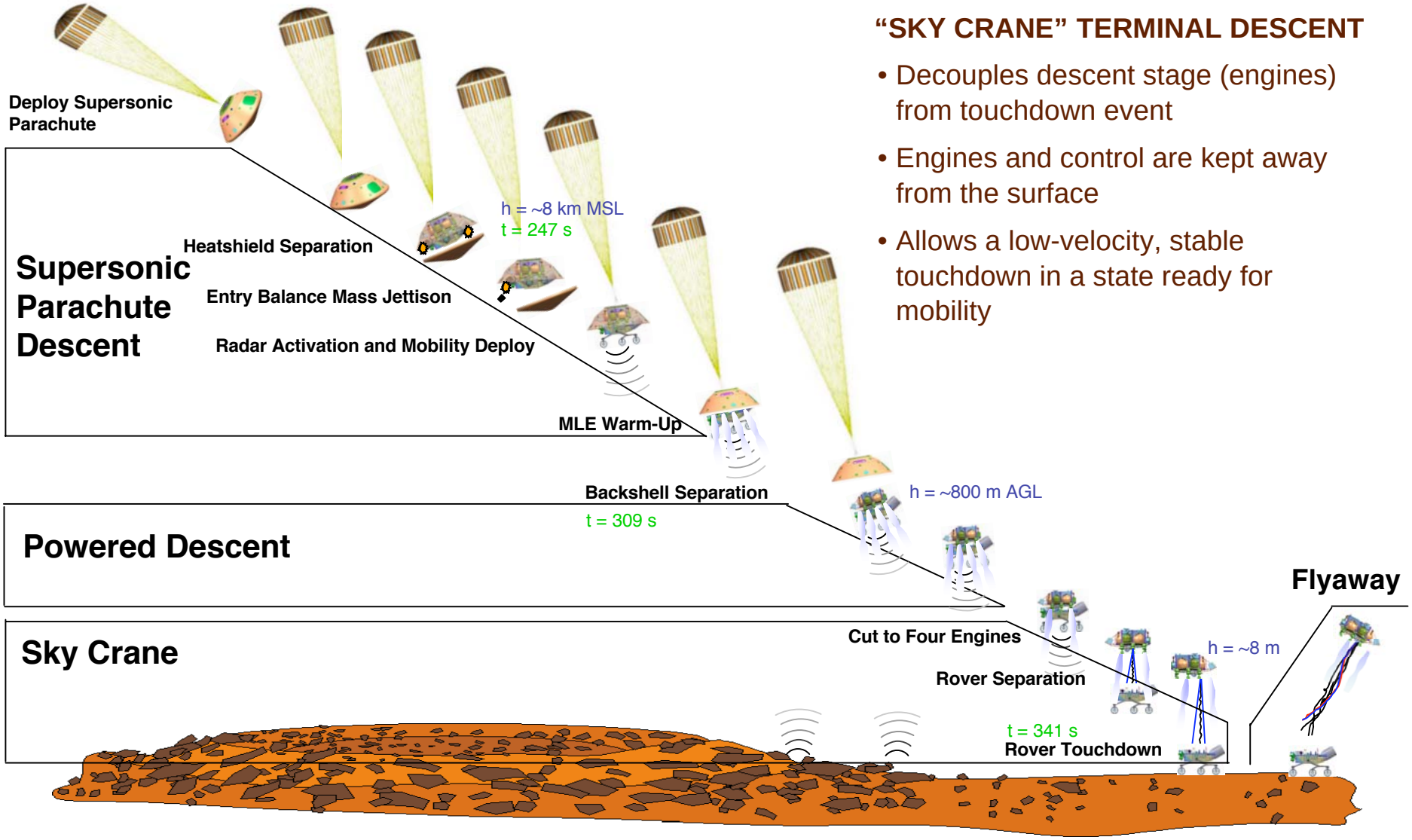

"SKY CRANE" TERMINAL DESCENT

- Decouples descent stage (engines) from touchdown event
- Engines and control are kept away from the surface
- Allows a low-velocity, stable touchdown in a state ready for mobility

2000 m above MOLA areoid

MSL - MER Comparison

	MSL	MER
LV/Launch Mass	Delta IV/Atlas V/3600 kg	Delta II/1050 kg
Prime Mission	1 yr. cruise/2 yrs. surface	7 mo. cruise/3 mo. surface
Redundancy	Selective	Selective/Dual Mission
Payload	10 instruments (75 kg)	5 instruments (~9 kg)
EDL System	Guided Entry/Skycrane	MPF Heritage/Airbags
Heatshield Diam.	4.5 m	2.65 m
EDL Comm.	UHF or DTE	DTE + Partial UHF
Surface Power	2500 W-hr/sol	<900 W-hr/sol
Surface Comm.	Orbiter Relay (+ DTE)	Orbiter Relay (+ DTE)
Rover Mass	775 kg (allocation)	170 kg (actual)
Rover Range	>20 km	>600 m (few km)
Landing Ellipse Size	20-km diameter circle	80 × 10-km ellipse (final)
Accessible Latitudes	60ºS to 60ºN	15ºS to 10ºN
Accessible Altitudes	< +2 km MOLA	< -1.3 km MOLA

Scientific Objectives for MSL

Investigations Will:

- Assess the biological potential of its landing region, including organics and biosignatures.
- Characterize the geology and geochemistry of its landing region.
- Perform definitive chemistry, mineralogy, and isotopic analyses of rock, regolith, and atmosphere.
- Investigate planetary processes of relevance to habitability, including the water cycle and radiation.

The Mars Science Laboratory will explore and quantitatively assess a local region on Mars' surface as a potential habitat for life, past or present.

Operations Scenario:

- Remote-sensing and environmental instruments characterize the local environment and identify target regions.
- Contact instruments analyze target region and identify potential samples.
- SA/SPaH acquires and prepares samples for analysis by mast, arm, and laboratory instruments.
- Analytical laboratory instruments investigate delivered sample portions.

Scientific Investigations Overview

Remote Sensing	MastCam	imaging, atmospheric opacity
	ChemCam	chemical composition, imaging
Contact	APXS	chemical composition
	MAHLI	microscopic imaging
Analytic Laboratory	SAM	chemical and isotopic composition, including organic molecules
	CheMin	mineralogy, chemical composition
Environmental	DAN	subsurface hydrogen
	MARDI	landing site descent imaging
	REMS	meteorology / UV radiation
	RAD	high-energy radiation
Total		**10**

- >120 investigators and collaborators.
- MSL also carries a sophisticated sample acquisition, processing and handling system.
- Significant international participation: Spain, Russia, Germany, Canada, France, Finland.

Current Rover Configuration

Conceptual Design

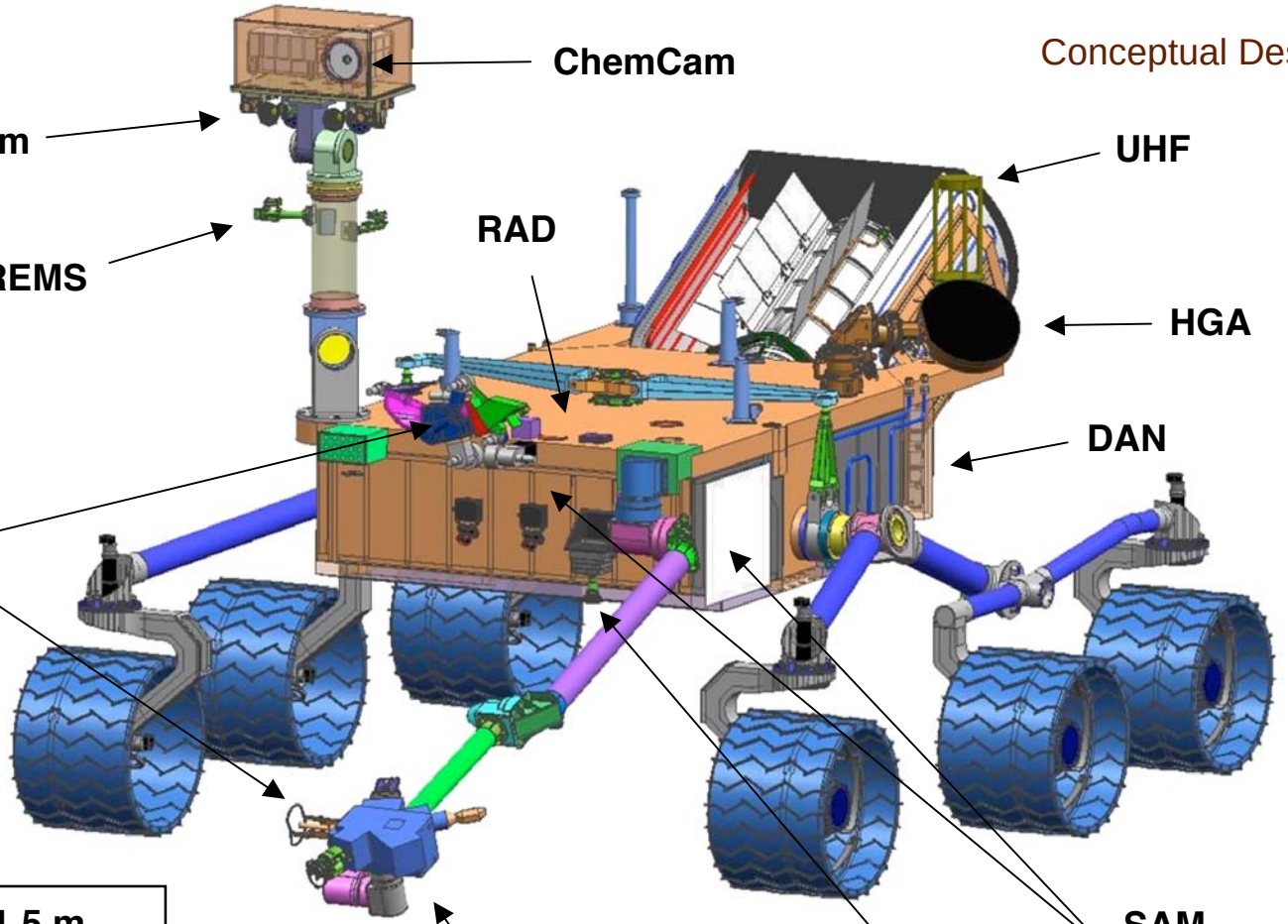

Wheel Base:	1.5 m
Height of Deck:	1.1 m
Height of Mast:	2.1 m
Wheel Diameter:	0.5 m
Clearance:	0.66 m

Mast Camera (MastCam)

Principal Investigator: Michael Malin

Malin Space Science Systems

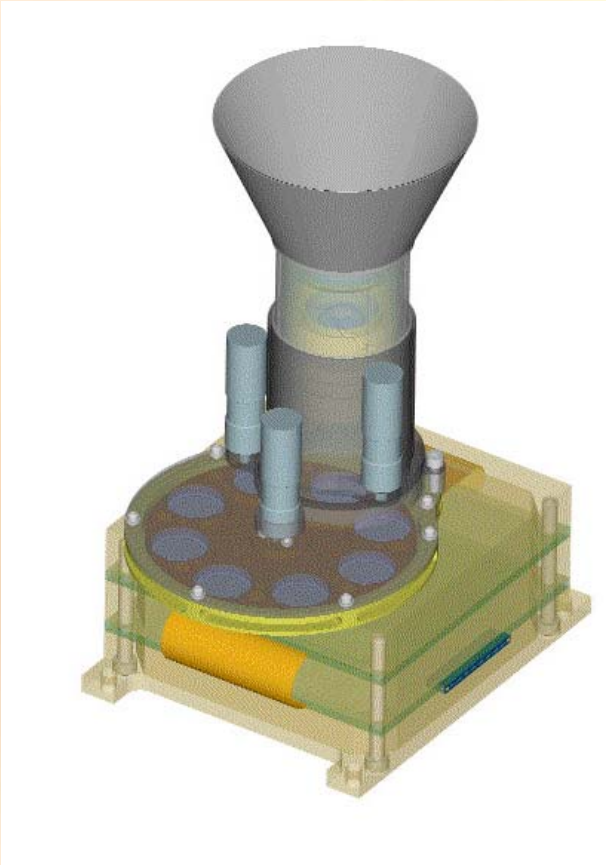

MastCam will observe the geological structures and features within the vicinity of the rover

- Studies of landscape, rocks, fines, frost/ice, and atmospheric features
- Stereo, zoom/telephoto lens: 15X, from 92° to 6° FOV
- Bayer pattern filter design for natural color plus narrow-band filters for scientific color
- High spatial resolution: 1200×1200 pixels (0.2 mm/pixel at 2 m, 8 cm/pixel at 1 km)
- High-definition video at 5-10 FPS, 1280×720 pixels
- Large internal storage: 256 MByte SRAM, 8 GByte flash

Chemistry & Micro-Imaging (ChemCam)

Principal Investigator: Roger Wiens

Los Alamos National Laboratory

Centre d'Etudes Spatiale des Rayonnements

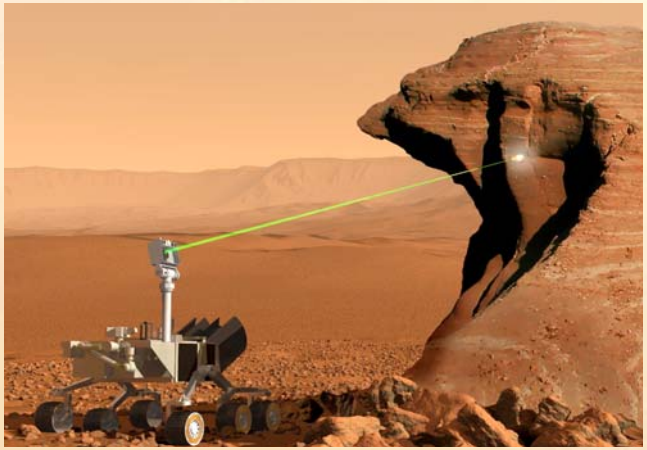

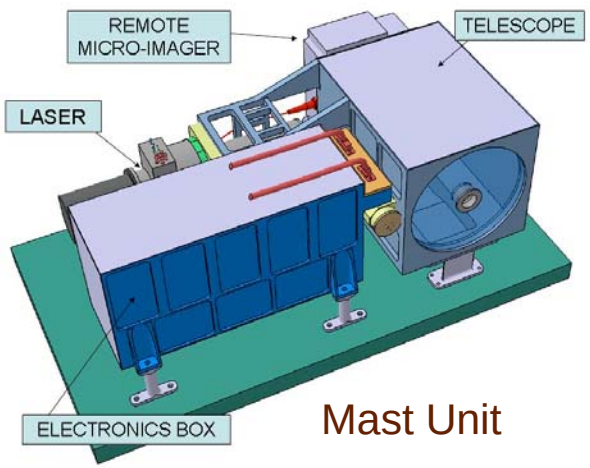

Mast Unit

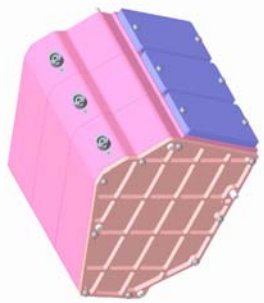

Spectrometers

ChemCam will perform elemental analyses through laser-induced breakdown spectroscopy

- Rapid characterization of rocks and soils from a distance of up to 9 meters
- 240-800 nm spectral range
- Dust removal over a ~1-cm region; depth profiling within a ~1-mm spot
- Will help classify hydrated minerals, ices, organic molecules, and weathering rinds
- High-resolution context imaging (0.08 mrad/pixel, or ~1 mm at 10 m)

Alpha Particle X-Ray Spectrometer (APXS)

Principal Investigator: Ralf Gellert

University of Guelph, Ontario, Canada

Canadian Space Agency

Heritage: Pathfinder, 2x MER

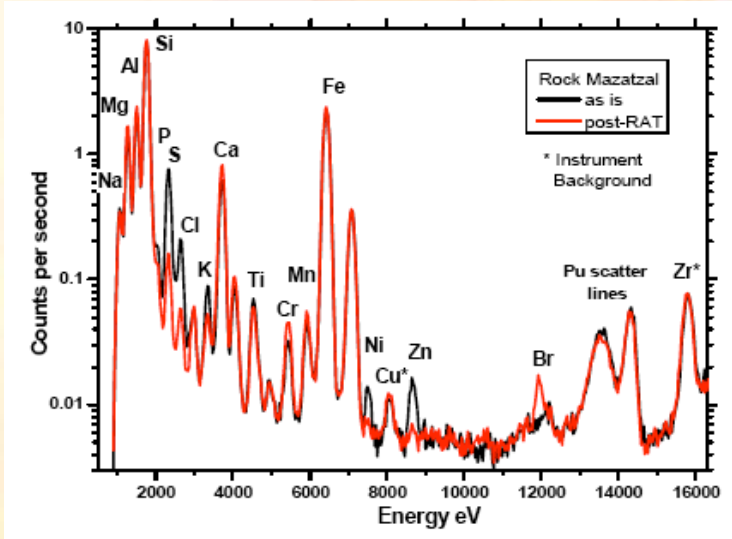

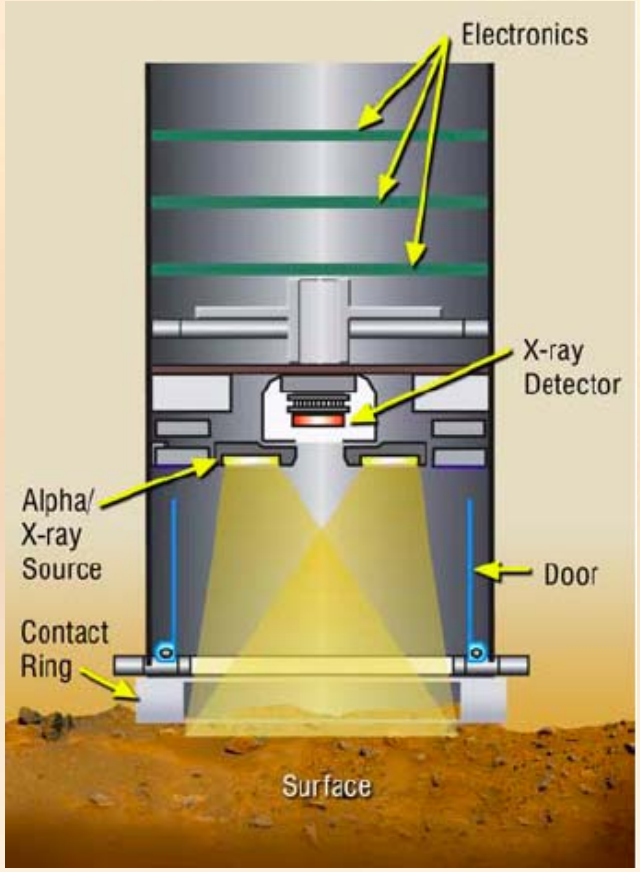

APXS will determine the chemical composition of rocks, soils, and processed samples

- Combination of particle-induced X-ray emission (α, ~5 MeV) and X-ray fluorescence (γ, ~14-18 keV); ^{244}Cm source
- Rock-forming elements from Na to Br and beyond
- Useful for lateral / vertical variability, surface alteration, detection of salt-forming elements
- Factor ~5 increased sensitivity, daytime operation compared with MER

Mars Hand Lens Imager (MAHLI)

Principal Investigator: Kenneth Edgett

Malin Space Science Systems

MAHLI will characterize the history and processes recorded in geologic materials encountered by MSL

- Examines the structure and texture of rocks, fines, and frost/ice at micrometer to centimeter scale
- Returns color images like those of typical digital cameras; synthesizes best-focus images and depth-of-field range maps
- Wide range of spatial resolutions possible; can focus at infinity; highest spatial resolution ~12.5 μm/pixel
- White light and UV LEDs for controlled illumination, fluorescence

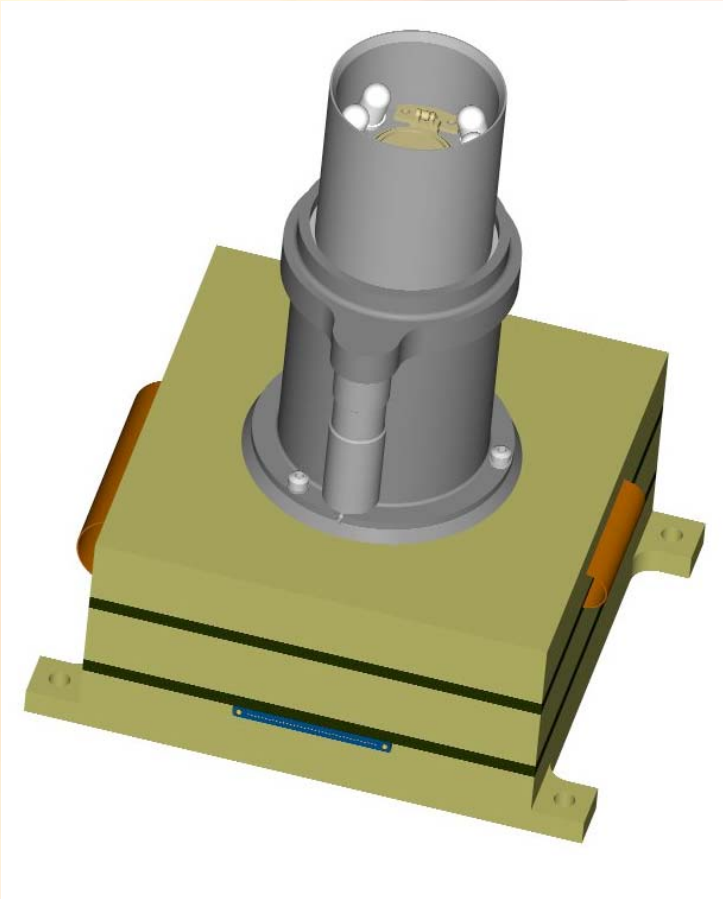

Chemistry & Mineralogy (CheMin)

Principal Investigator: David Blake

NASA Ames Research Center

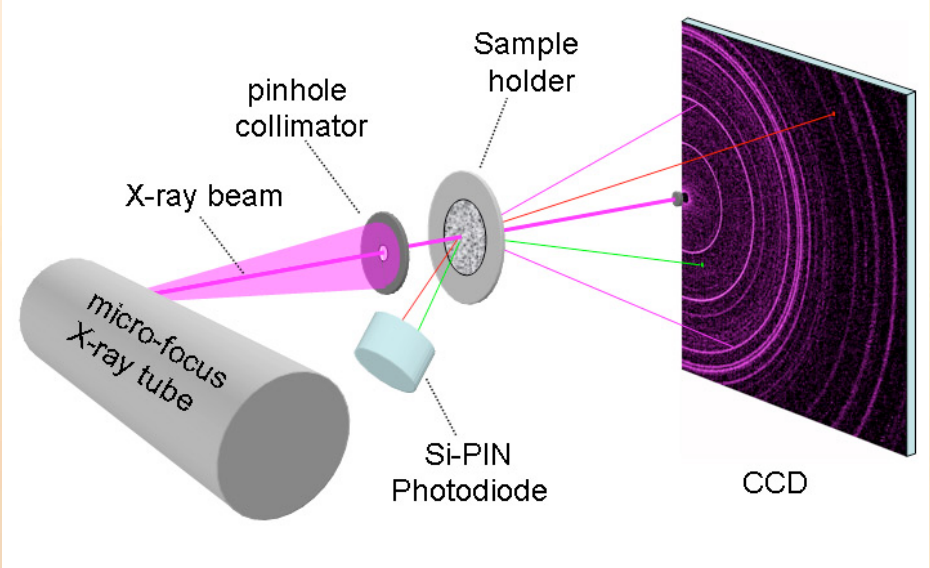

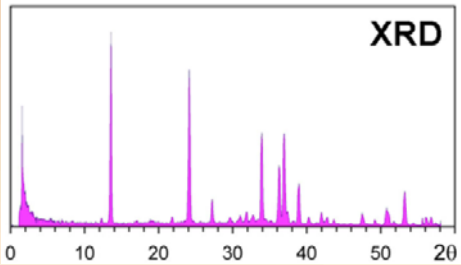

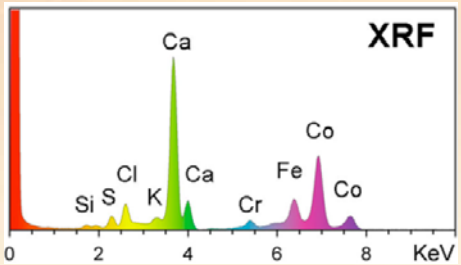

CheMin performs definitive mineralogy and elemental analyses

- X-ray diffraction & X-ray fluorescence (XRD/XRF); standard techniques for mineralogical analysis
- Identification and quantification of minerals in geologic materials (e.g., basalts, evaporites, soils)

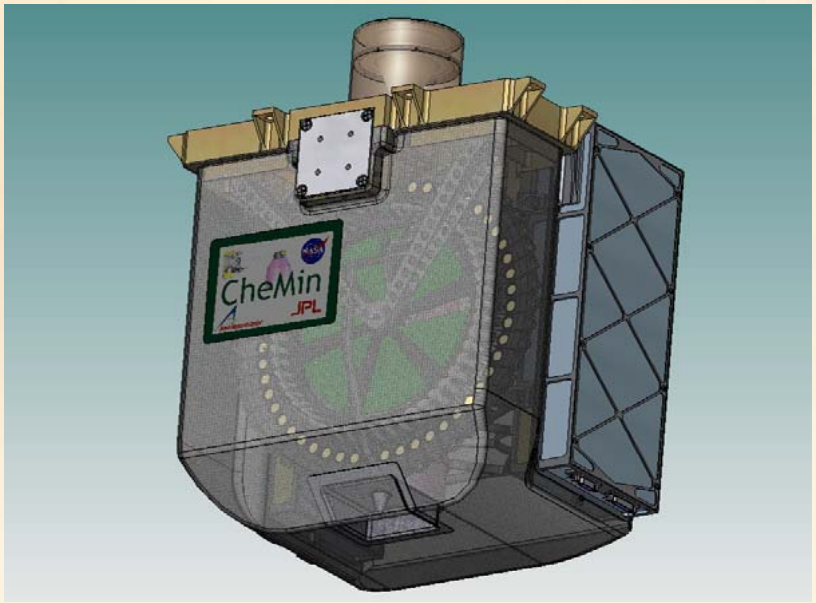

Sample Analysis at Mars (SAM)

Principal Investigator: Paul Mahaffy

NASA Goddard Space Flight Center

SAM Suite Instruments

Quadrupole Mass Spectrometer (QMS)
Gas Chromatograph (GC)
Tunable Laser Spectrometer (TLS)

- Search for organic compounds of biotic and prebiotic relevance, including methane, and explore sources and destruction paths for carbon compounds
- Reveal chemical state of other light elements that are important for life as we know it on Earth
- Study the habitability of Mars by measuring oxidants such as hydrogen peroxide
- Investigate atmospheric and climate evolution through isotope measurements of noble gases and light elements

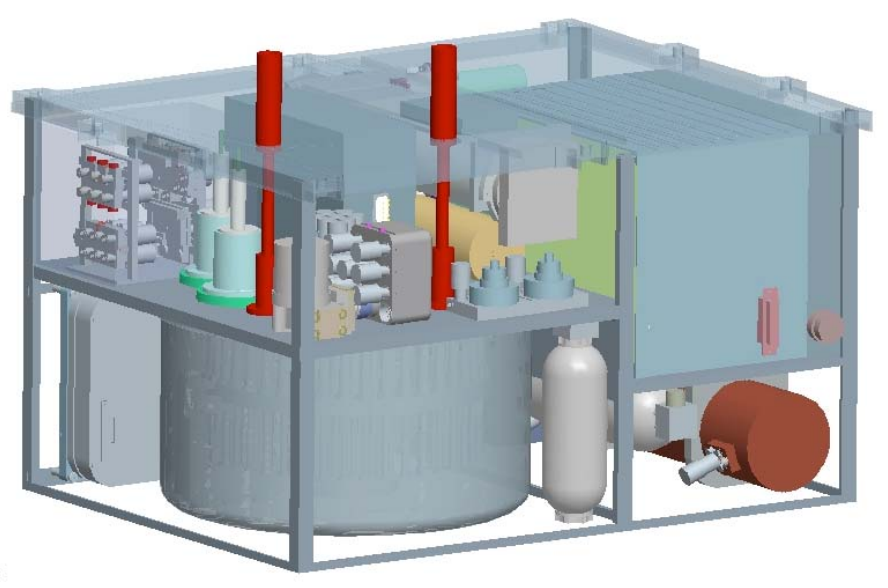

- **QMS:** molecular and isotopic composition in the 2-535 Dalton mass range for atmospheric and evolved gas samples
- **GC:** resolves complex mixtures of organics into separate components
- **TLS:** abundance and precision (<10 per mil) isotopic composition of CH_4, H_2O, CO_2, N_2O, and H_2O_2

Dynamic Albedo of Neutrons (DAN)

Principal Investigator: Igor Mitrofanov

Space Research Institute (IKI), Russia

- Measures the abundance of hydrogen (e.g., in water or hydrated minerals) within one meter of the surface

Large albedo flux of thermal neutrons

Small albedo flux of thermal neutrons

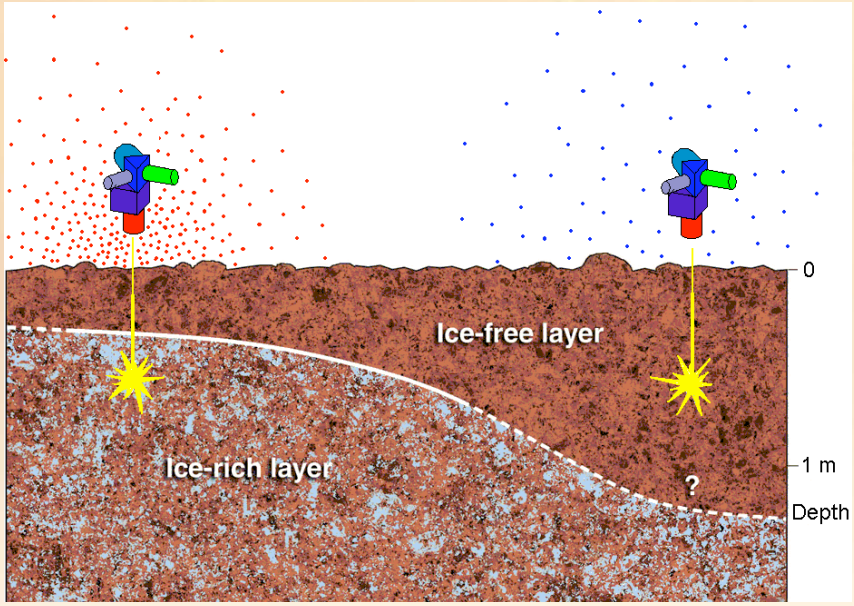

Pulsing Neutron Generator

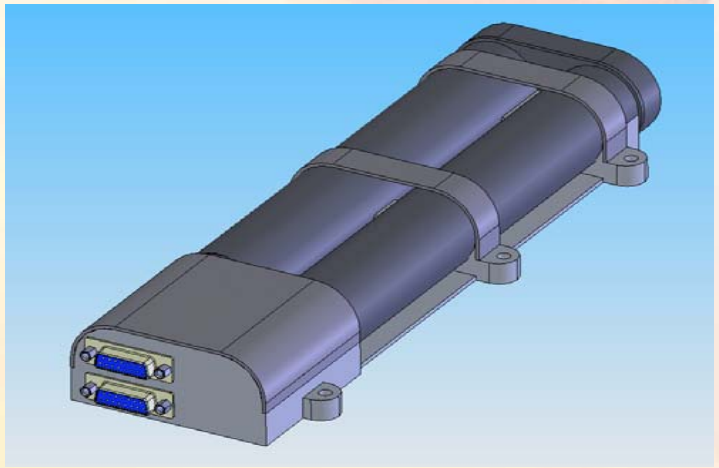

Thermal & Epithermal Neutron Detectors

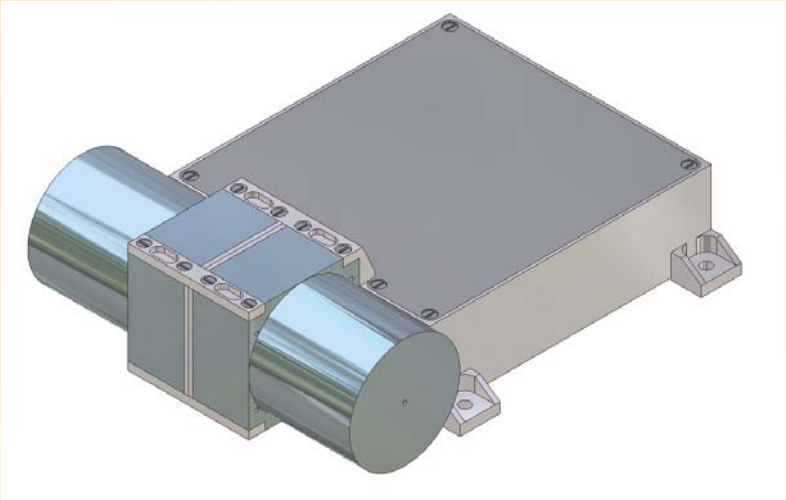

Radiation Assessment Detector (RAD)

Principal Investigator: Donald M. Hassler

Southwest Research Institute

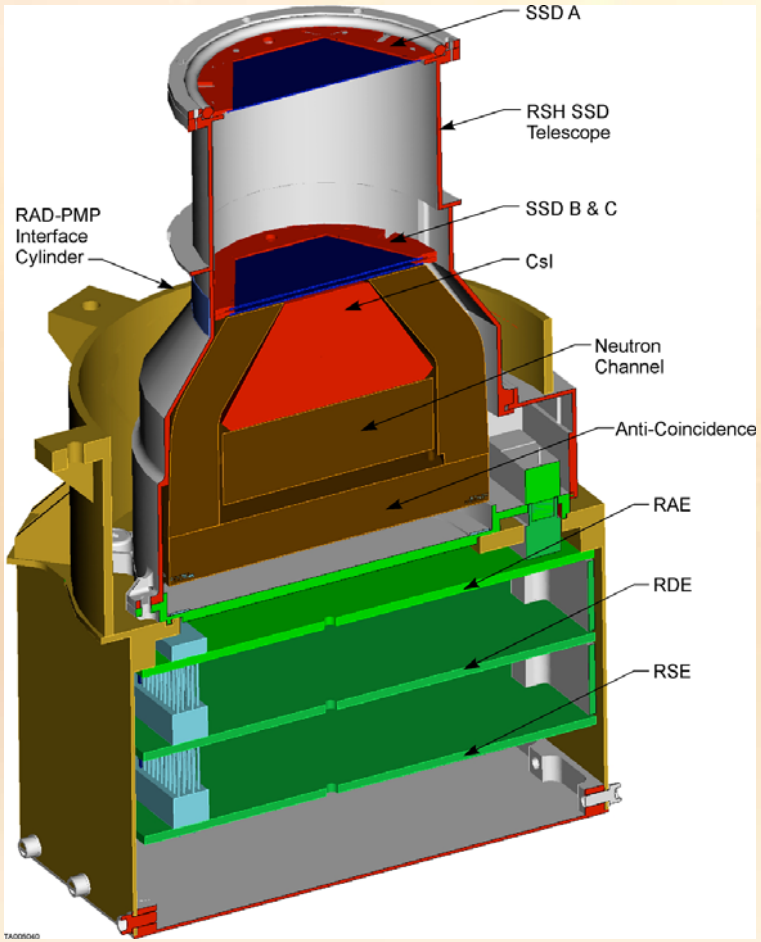

RAD will characterize the radiation environment on the surface of Mars

- Measures galactic cosmic ray and solar energetic particle radiation, including secondary neutrons and other particles created in the atmosphere and regolith
- Will determine human dose rate, validate transmission/transport codes, assess hazard to life, study the chemical and isotopic effects on Mars' surface and atmosphere
- Solid state detector telescope and CsI calorimeter. Zenith pointed with 65º FOV
- Detects energetic charged particles (Z=1-26), neutrons, gamma-rays, and electrons

Rover Environmental Monitoring Station (REMS)

Principal Investigator: Luis Vázquez

Centro de Astrobiología (CAB), Spain

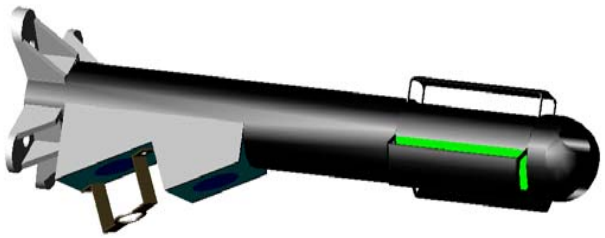

Boom 1

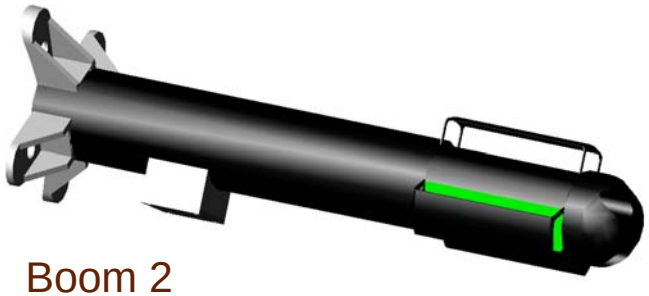

Boom 2

REMS measures the meteorological and UV radiation environments

- Two 2-D horizontal wind sensors
- Vertical wind sensor
- Ground and air temperature sensors
- Pressure sensor
- Humidity sensor
- UV radiation detector (<200 to 400 nm)
- 1-Hz sampling for 5 minutes each hour

Mars Descent Imager (MARDI)

Principal Investigator: Michael Malin

Malin Space Science Systems

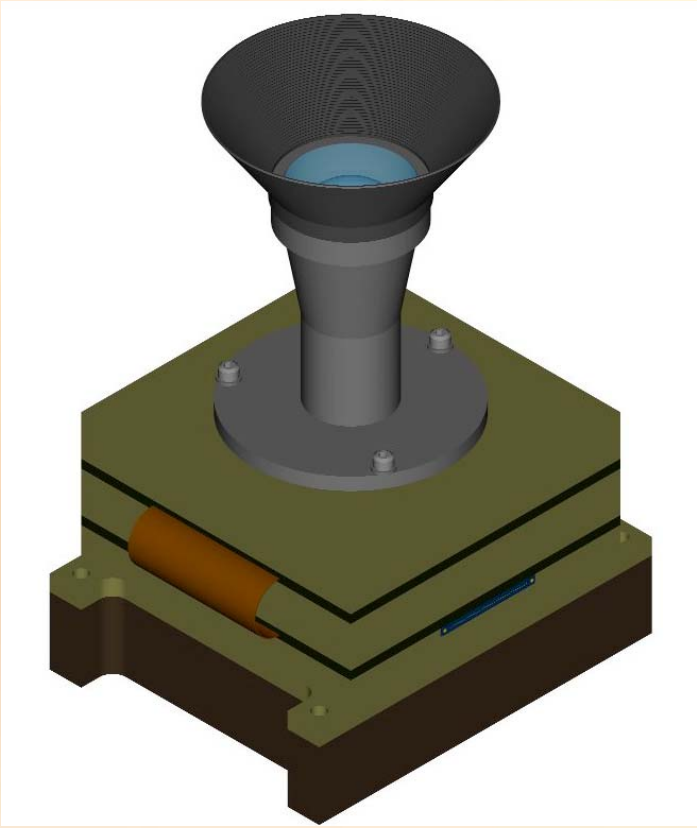

MARDI will provide detailed imagery of the MSL landing region

- Provides images over three orders of magnitude in scale, tying post-landing surface images to pre-landing orbital images
- Bayer pattern filter for natural color
- Short exposure time to reduce image blurring from spacecraft motion
- High-definition, video-like data acquisition (1600×1200 pixels, 5 frames/sec)
- Large internal storage: 256 MByte SRAM, 8 GByte flash

Sample Acquisition, Processing, & Handling

Developed at JPL

w/Honeybee Robotics

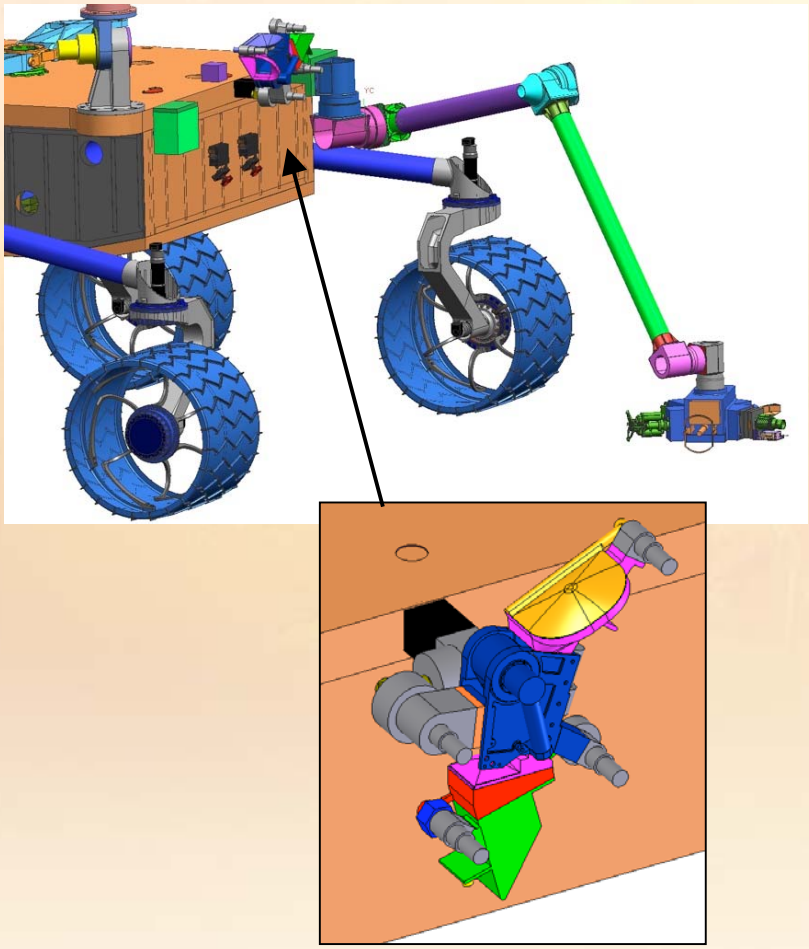

The SA/SPaH has the following capabilities:

- Abrade and/or brush surfaces
- Place and hold contact instruments
- Acquire core samples up to 5 cm deep
- Acquire 70 samples of rock or regolith via coring device or scoop
- Process rock cores, small pebbles, or regolith into 150-μm to 1-mm particles for analytical lab instruments
- Provide additional opportunities for analysis during processing; deliver to analytical instruments

Mars Community Involvement in MSL

- Over 120 PIs, Co-Is, and collaborators
- NASA plans to call for MSL Interdisciplinary Scientists, Facility Investigation Scientists, and Participating Scientists. Most will join the Project just before launch and participate in operational readiness tests. Some will join the Project earlier to participate more fully in the development.
- The MSL landing site selection will depend on community involvement. Annual, open workshops will be convened to review the community's analyses of candidate sites for safety and scientific utility.
- NASA has appointed a Landing Site Selection Steering Committee co-chaired by John Grant (Smithsonian Inst.) and Matt Golombek (JPL).

Landing Site Access

Maps show -90º to 90º latitude; 180º to -180º W longitude; horizontal lines at 60º latitude; blacked out areas are > 2km elevation

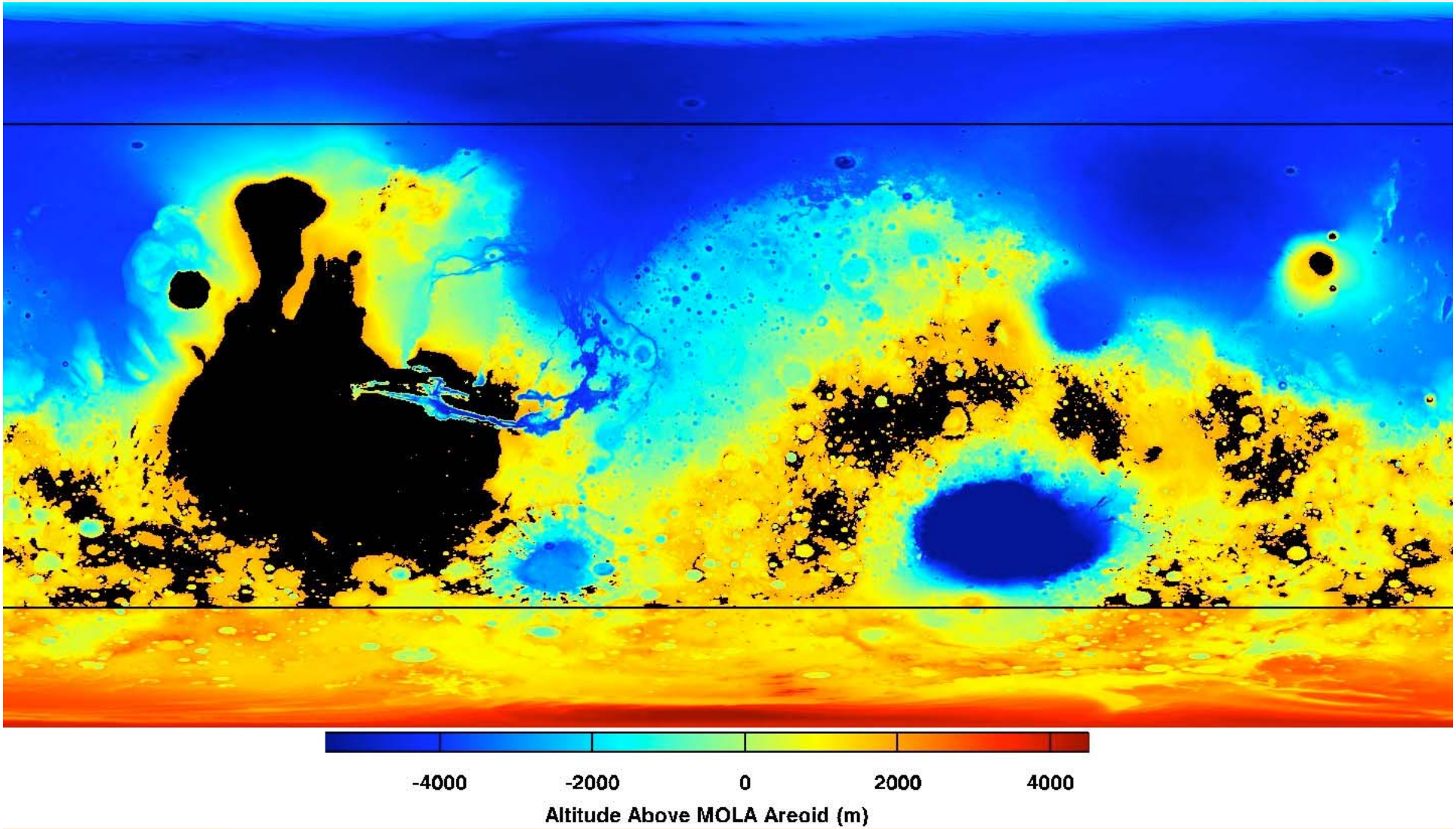
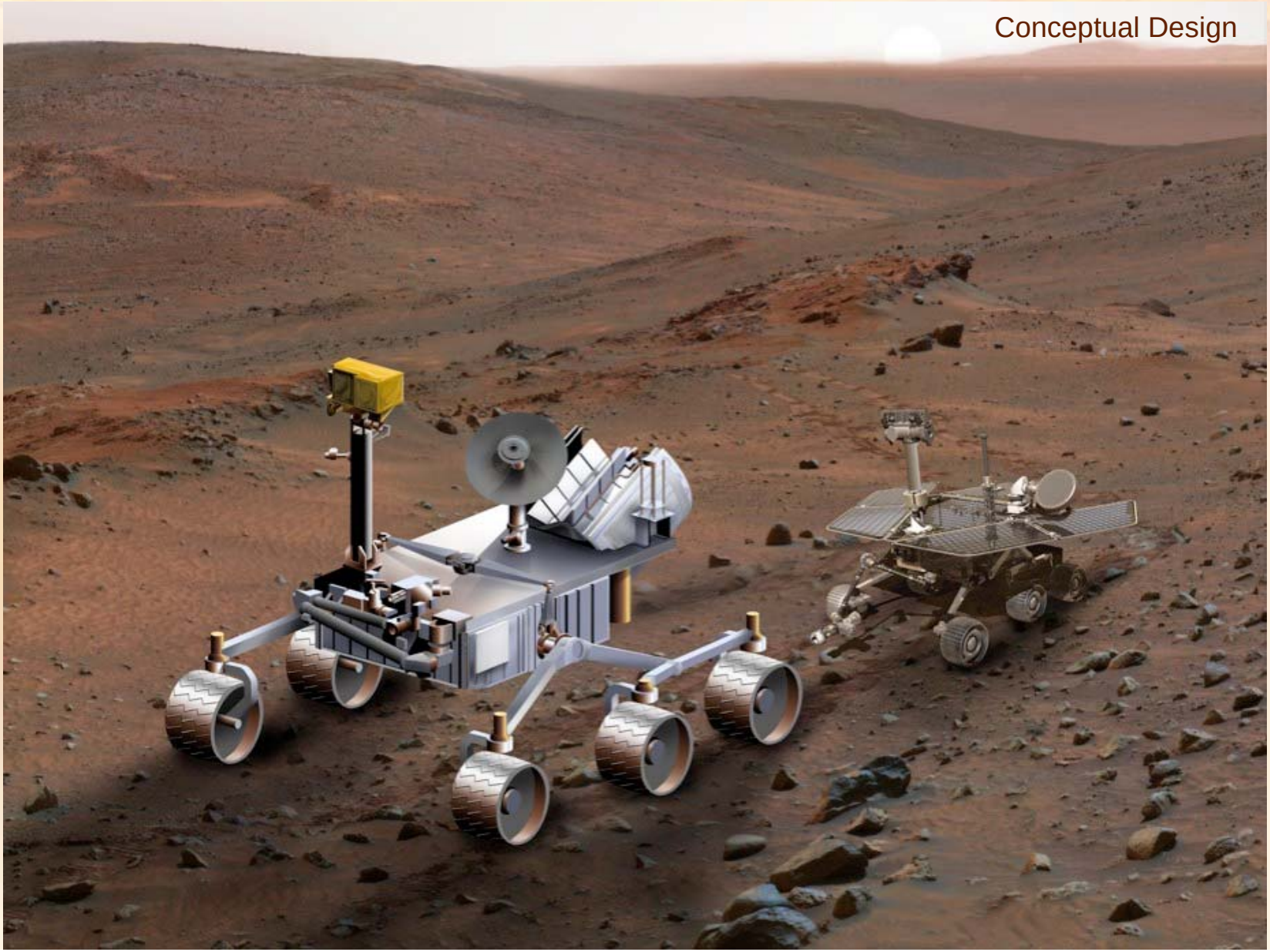
Current Rover Configuration